## Miniature Fisheye Lens

### Description

DSL216 lens is a miniature high resolution fisheye lens designed for applications in automotive and security market.

### Key Features

- Horizontal field of view (HFOV): 187° on 1/4” format imager
- Full circular image on 1/3” format imager
- Mega pixel resolution
- All glass elements
- Compact size

### Applications

- Automotive
- Security

### Optical Specifications

| PN | DSL216 |
|---|---|
| Description | Miniature fisheye lens |
| Imager Format | 1/4" and 1/3” |
| Focal Length (mm) | 1.27 |
| F/# | 2.0 |
| Design Image Circle (mm) | 3.6 |
| HFOV (on ¼”) | 187<br>(full circular image on 1/3”) |
| VFOV (on ¼”) | 128 |
| F- θ Distortion | <-13% |
| Relative Illumination at 100% field | 60% |
| Total Optical Track Length (mm) | 18 |
| Chief Ray Angle | ~6 deg |
| IR Filter | Integrate IR-cut coating @670nm |

## DSL216A Mechanical dimensions (in mm):

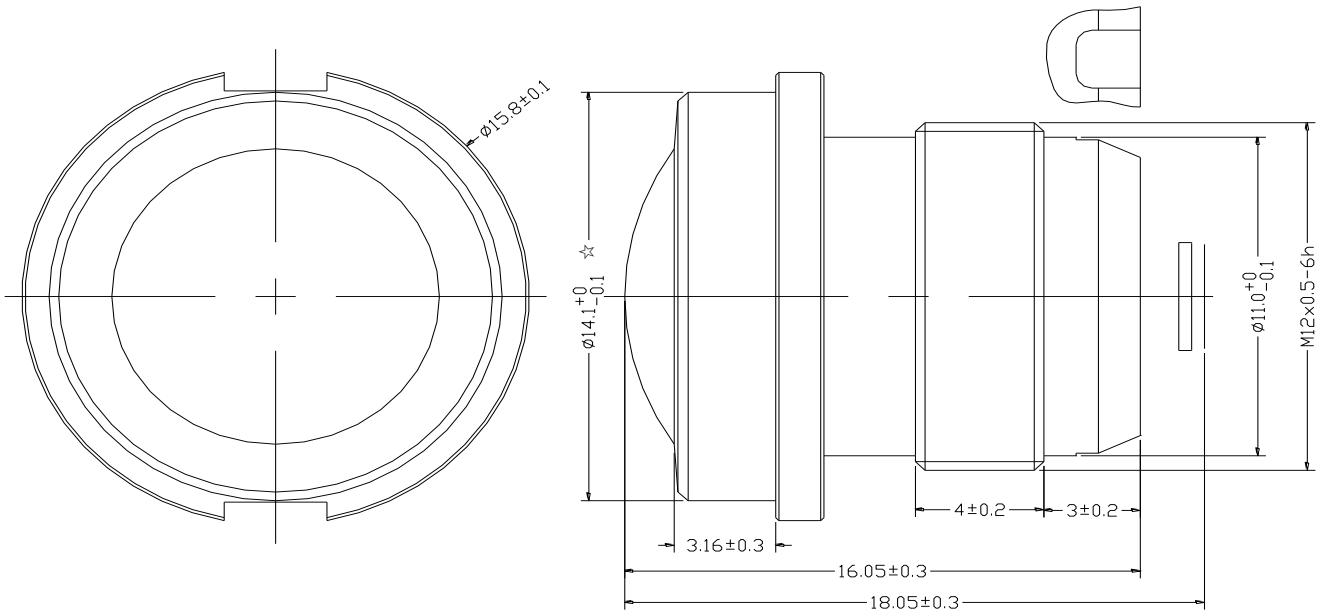

## Image circle vs. imager size:

### Definition of Imager Format and Size

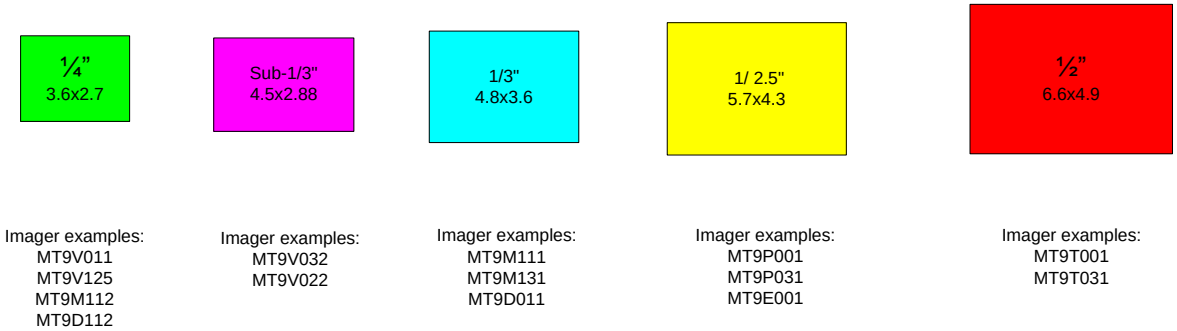


### Sunex Miniature Fisheye Lens Image Circle Projection

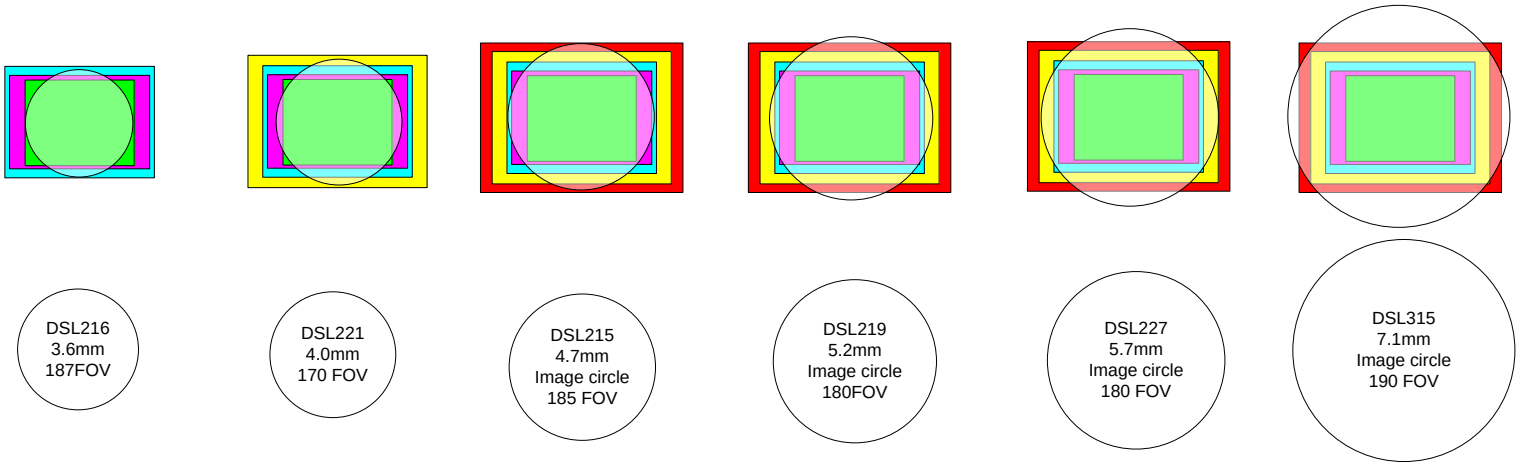


.